ASSEMBLY INSTRUCTION

RJ*VM/RJ*VI-* | 6.35mm Vertical Jack

Ⓐ

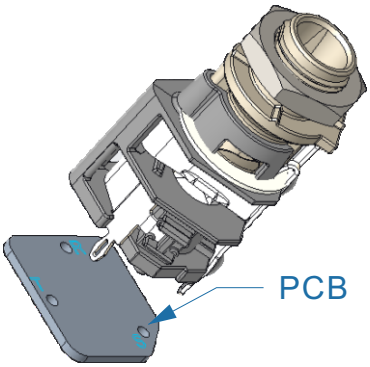

RJ3VM-*

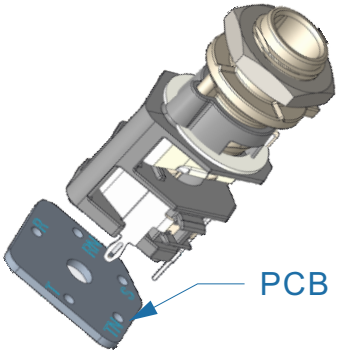

RJ5VM-*

Ⓐ **Solder the connector onto the PCB.**

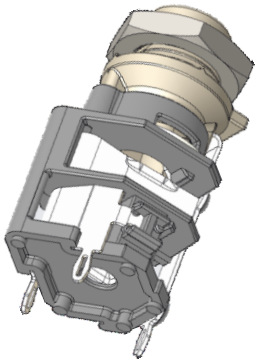

RJ3VM

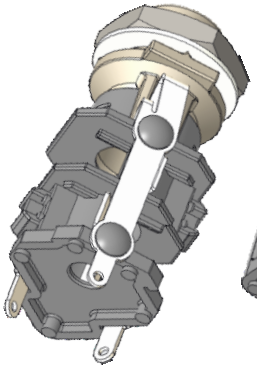

RJ3VM-S

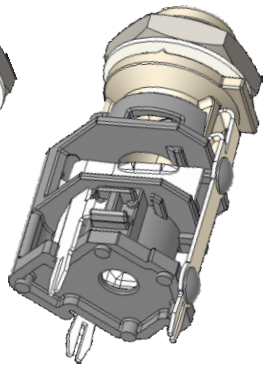

RJ3VM-D1

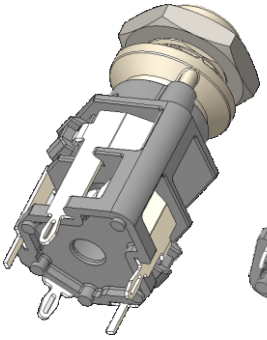

RJ5VM

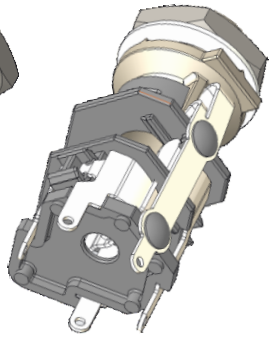

RJ5VM-S

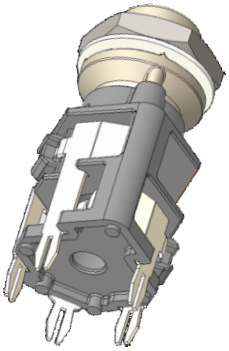

RJ5VM-D1

Remark: The Contact position of RJ*VI-* is the same with RJ*VM-*, just thread nose is different.

Ⓑ

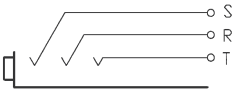

RJ3VM-*

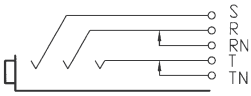

RJ5VM-*

Ⓑ **Circuits.**

6.35mm Vertical Jack:
Find more details on
www.rean-connectors.com

Neutrik AG	**LI**	T: +423 / 237 24 24	F: +423/232 53 93	**Neutrik France**	**FR**	T: +33 1/4131 6750	F: +33 1/4131 0511
Neutrik USA Inc.	**USA**	T: +1 704 / 972 3050	F: +1 704/438 9202	**Neutrik Tokyo Ltd.**	**JP**	T: +81 3/3663 4733	F: +81 3/3663 4796
Neutrik (UK) Ltd.	**UK**	T: +44 1983 / 811 441	F: +44 1983/811 439	**Neutrik Hong Kong Ltd.**	**HK**	T: +852/2687 6055	F: +852/2687 6052
Neutrik Vertriebs GmbH	**DE/NL/AT/DK**	T: +49 8131 / 280 890	F: +49 8131/280 830	**Neutrik Trading Ltd.**	**CN**	T: +0574/8825 0833	F: +0574/8826 5000

Draft. Nr.: NCN 013 | **Update: 2021-03-24** | Data subject to change without prior notice. © 2021 REAN®. REAN® is registered trademark of Neutrik AG. ALL RIGHTS RESERVED.